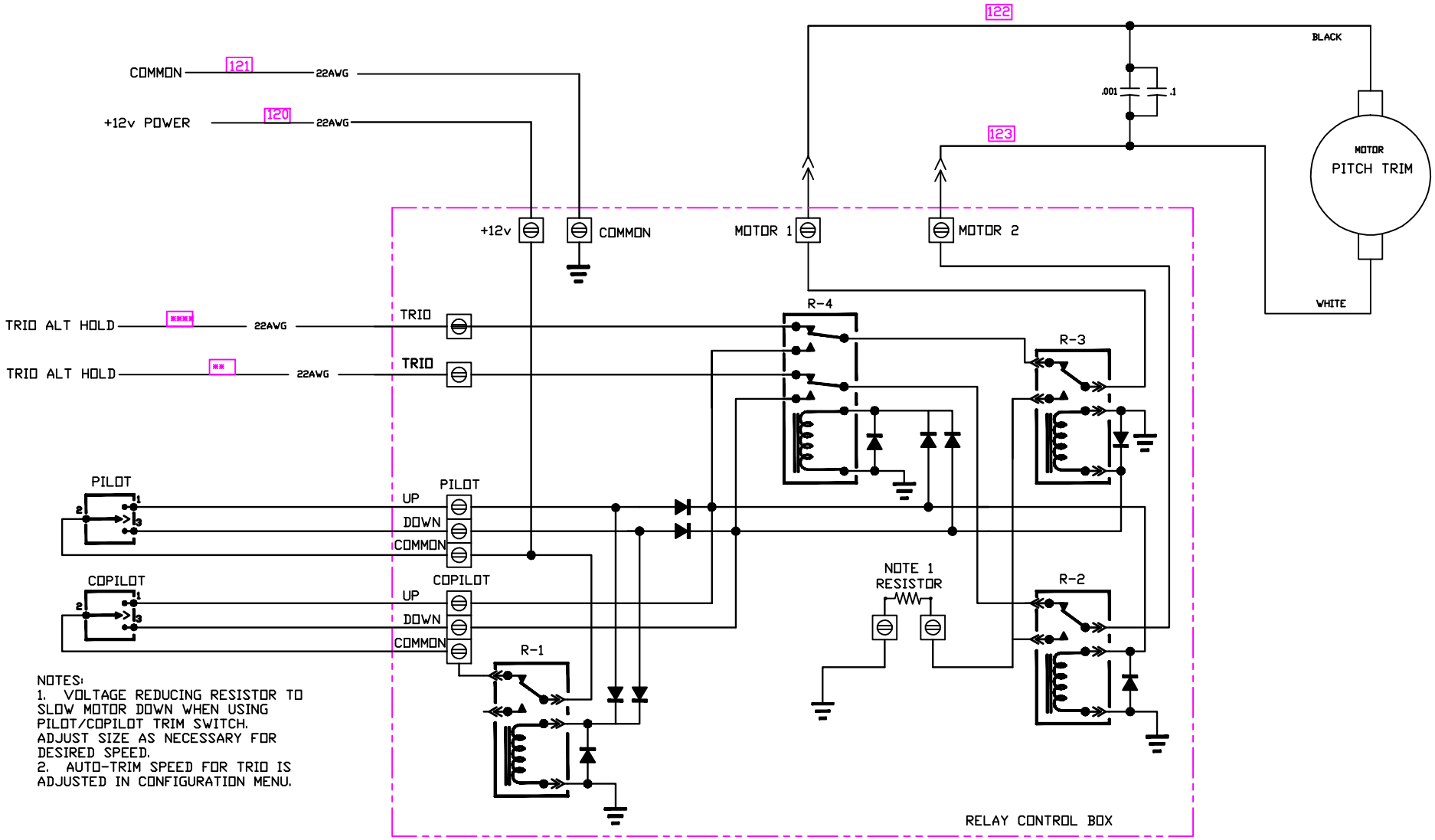

NOTES:
1. VOLTAGE REDUCING RESISTOR TO SLOW MOTOR DOWN WHEN USING PILOT/COPILOT TRIM SWITCH. ADJUST SIZE AS NECESSARY FOR DESIRED SPEED.
2. AUTO-TRIM SPEED FOR TRIO IS ADJUSTED IN CONFIGURATION MENU.